P/N	INTERFACE(S)	Ø A	B	C
−1CC	FULL DETENT	.116	.090	.095
−2CC	LIMITED DETENT	.120	.090	.095
−3CC	SMOOTH BORE	.125	.090	.095
−4CC	FULL DETENT	.116	.050	.055
−5CC	LIMITED DETENT	.120	.050	.055
−6CC	SMOOTH BORE	.125	.050	.055

REVISIONS				
ZONE	REV	DESCRIPTION	DATE	BY
–	L	ECO 21939	01.28.09	P.MAO

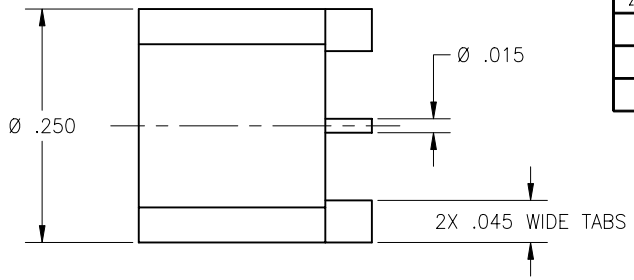

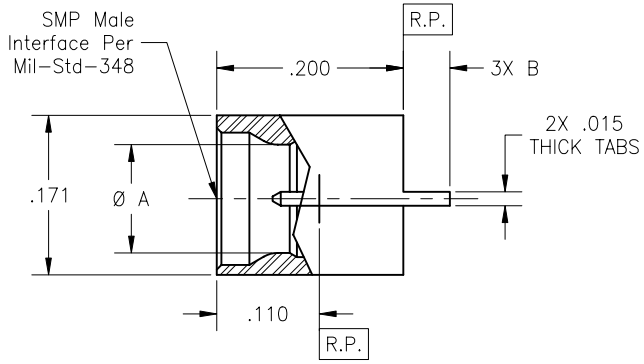

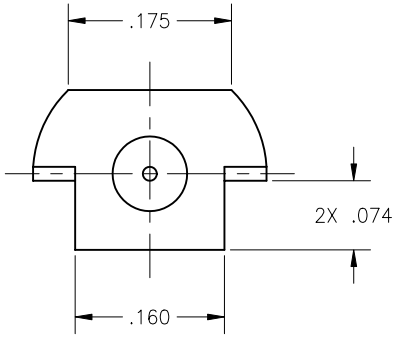

Note(s):

1. Dimensions shown are for Rogers 4350 PCB material. These dimensions may vary depending on PCB material used.

MATERIAL(S):

Body & Center Conductor:
BeCu alloy per ASTM B−196 or B 197.
Dielectric:
PTFE per ASTM D−1710.

ELECTRICAL:

Impedance: 50 Ohms nominal.
Frequency Range: DC to 18.0 GHz.
VSWR: 1.06 + .005 X f(GHz).
Insertion Loss: 0.10 dB max to 18.0 GHz.
Working Voltage: 335 Vrms max @ sea level.
65 Vrms max @ 70,000 ft.
Dielectric Withstanding Voltage: 500 Vrms min.
R.F. HiPot Voltage: 325 Vrms min @ 5MHz.
Corona Level: 190 Vrms @ 70,000 ft.
Insulation Resistance: 5,000 MegOhms min.
Contact Resistance:
Center Contact: 4.0 Milliohm max.
Outer Contact: 2.0 Milliohm max.
R.F. Leakage: −80 dB max to 3.0 GHz.
−60 dB max to 18.0 GHz.

MECHANICAL:

Mating Characteristics:
Interface per Mil−Std−348.
Force To Engage:
Full Detent: 15 lbs max
Limited Detent: 10 lbs max
Smooth Bore: 2 lbs max
Force To Disengage:
Full Detent: 5 lbs min
Limited Detent: 2 lbs min
Smooth Bore: .5 lbs min
Center Contact Retention:
Axial Force: 1.5 pounds min.
Note: 10 lbs min when contact is soldered onto PCB.
Radial Torque: NA
Connector Durability:
Full Detent: 100 cycles min.
Limited Detent: 500 cycles min.
Smooth Bore: 1,000 cycles min.
Connector Attachment Strenght: 20 lbs max.
Note: Depend on the solder techniques.

ENVIRONMENTAL:

Temperature Range: −65°C to +165°C.
Thermal Shock:
Mil−Std−202, Method 107, Test Cond. C.
Moisture Resistance:
Mil−Std−202, Method 106, except step 7b shall be omitted. Insulation resistance at lease 1,000 MegOhms within 5 minutes after removal from humidity.
Corrosion:
Mil−Std−202, Method 101, Test Cond. B.
Vibration:
Mil−Std−202, Method 204, Test Cond. D.
Shock:
Mil−Std−202, Method 213, Test Cond. I.

FINISH(ES):

Body & Center Conductor:
Gold plate per ASTM B−488, Type II, Code C or D, Class 1.25 over nickel under plated per SAE AMS−QQ−N−290, Class 1.

APPLICABLE CARLISLE IT DOCUMENTS

WORK STD	PROD INST	ASSY INST
NA	NA	NA

NOTICE

THIS DRAWING EMBODIES A CONFIDENTIAL PROPRIETARY DESIGN ORIGINATED BY CARLISLE INTERCONNECT TECHNOLOGIES AND ALL DESIGN, MANUFACTURING, REPRODUCTION, USE AND SALE RIGHTS REGARDING THE SAME ARE EXPRESSLY RESERVED. IT IS SUBMITTED UNDER A CONFIDENTIAL RELATIONSHIP FOR A SPECIFIED PURPOSE AND THE RECIPIENT AGREES BY ACCEPTING THIS DRAWING NOT TO SUPPLY OR DISCLOSE ANY INFORMATION REGARDING IT TO ANY UNAUTHORIZED PERSON TO INCORPORATE INOTHER PROJECTS ANY SPECIAL FEATURE PECULIAR TO THIS DESIGN. ALL PATENT RIGHTS HERETO ARE EXPRESSLY RESERVED BY CARLISLE INTERCONNECT TECHNOLOGIES, LONG BEACH, CA 90815

TOLERANCES AND NOTES EXCEPT AS NOTED

DIMENSIONS ARE IN INCHES.
LINEAR .XX ±.015 .XXX ±.005 ANGULAR ± 1/2°
FRACTION ± 1/32

1. MACHINE FINISH: 63 RMS
2. BREAK ALL SHARP EDGES .003 MAX.
3. MACHINED FILLETS .005 MAX.
4. MACHINED SURFACES SQUARE TO RESPECTIVE AXIS WITHIN .005 INCHES PER INCH.
5. MACHINED DIAMETERS CONCENTRIC WITHIN .002 T.I.R.
6. DIMENSIONS TO BE MET BEFORE PLATING.
7. CHAMFER ALL THREADS 45°.
8. THREADS PER H−28.
9. REMOVE FRAYED EDGES ON TEFLON.
10. REMOVE ALL BURRS.

MATERIAL		SIZE	SPECIFICATION	PROCUREMENT
–		–	–	–

APPROVAL INITIALS		DATE
DRAWN BY	ATV	08.10.99
CHECKED BY	P.MAO	08.10.09
TEST ENGG		
QUALITY		
DESIGN ENGG	DNg	08.31.09
MFG ENGG		

CARLISLE Interconnect Technologies
Long Beach, CA 90815

TITLE: SMP MALE, PCB EDGE MOUNT TO Ø .015 STRAIGHT TERMINATION

SCALE: 10:1 | SUB-DIRECTORY\FILENAME: _OLPXXX\OLP606 | SHEET 1 OF 2

SIZE: C | CAGE CODE: 30990 | DRAWING NO.: P606 | REV.: L

ENG−DWG REV. C

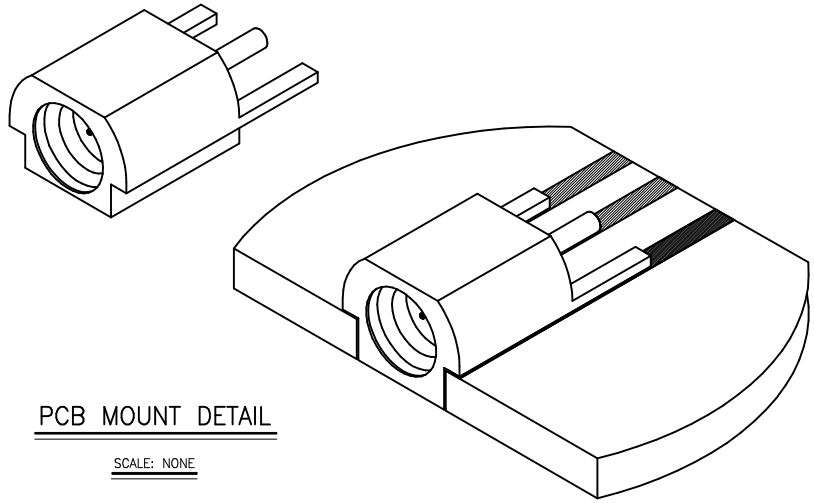

PCB MOUNT DETAIL

SCALE: NONE

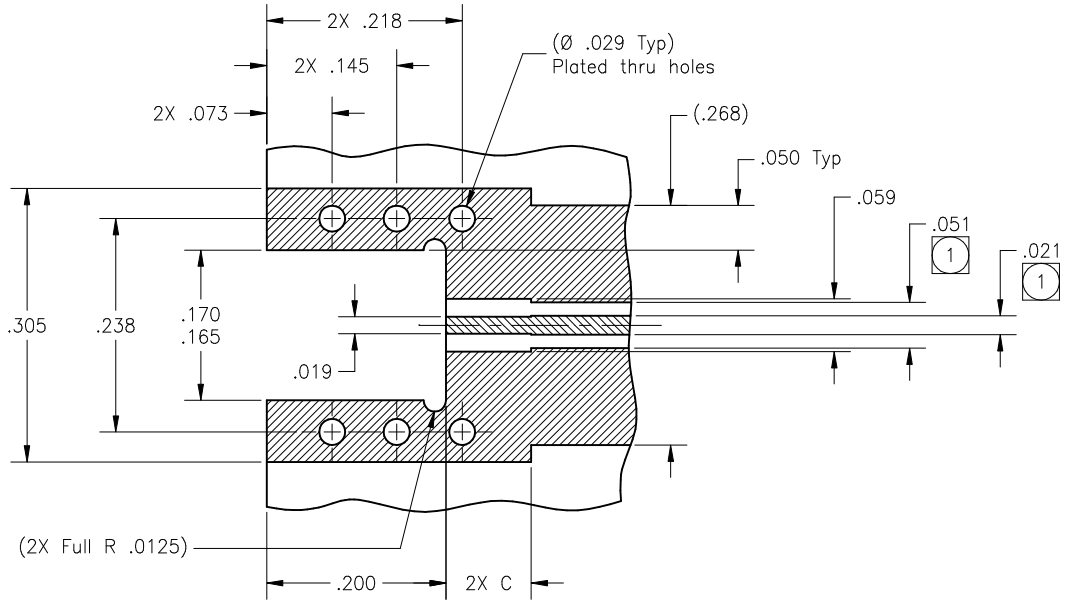

RECOMMENDED PCB CUTOUT

SCALE: 10:1

SCALE	SUB-DIRECTORY\FILENAME		
10:1	_OLPXXX\OLP606	SHEET 2 OF 2	
SIZE C	CAGE CODE 30990	DRAWING NO. P606	REV. L

ENG-DWG REV. C