High Reliability Multilayer Ceramic Chip Capacitor

Part Number: 1812B154K201CHT-HS

Description: 1812 200Vdc 150nF ±10% X7R (2R1) - Contains Lead

A range of X7R MLC capacitors to suit a variety of applications. In a wide selection of chip sizes, rated voltages and terminations, including FlexiCap™, the world's first commercially available flexible termination.

WS2 and WS3 parts use StackiCap™ patented construction technology.

Suffix code PXX or PX mandates the use of precious metal electrode (PME) materials. This may incur additional costs.

HS = MIL-PRF-123, Group A

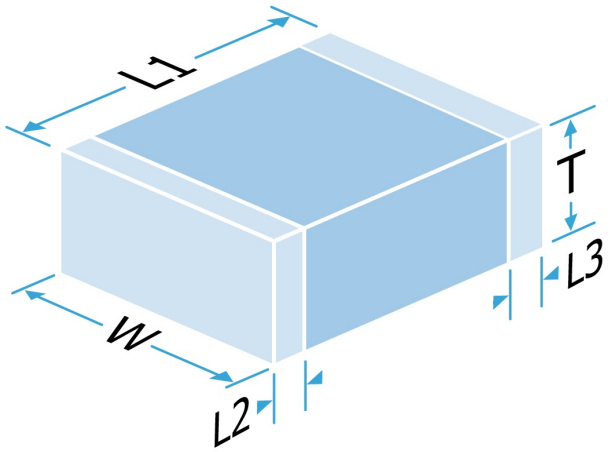

Mechanical Specification

Size Code	1812
Length (L1) in mm (")	4.5 +0.40/-0.30 (0.180 +0.016/-0.012)
Width (W) in mm (")	3.2 ± 0.20 (0.126 ± 0.008)
Thickness (T) in mm (")	2.5 Max (0.1 Max)
Minimum Termination Band (L2,L3) in mm (")	0.25 (0.010)
Maximum Termination Band (L2,L3) in mm (")	1.143 (0.045)
Termination Material	FlexiCap™ Polymer termination, Nickel barrier, Sn Plated Solder (RoHS compliant)
Solderability	Per MIL-STD-202, Method 208
Packaging	Tape and Reel, 500 per reel
Conformal Coating	

General Electrical Specification

Rated Voltage	200Vdc
Nominal Capacitance Value	150nF
Capacitance Tolerance	±10%
Tangent of Loss Angle (Tan δ)	≤0.025
Capacitance and Tan δ Test Conditions	1.0Vrms @ 1kHz
Voltage Proof (Voltage applied for 5 secs max. @ 50mA max. charge current)	500Vdc
Min Insulation Resistance (IR)	6.67GOhm @ 100Vdc
Dielectric Classification	X7R (2R1) - Contains Lead
Rated Temperature Range	-55°C / +125°C
Maximum Capacitance Change over Temperature Range	No DC Voltage ±15% Rated DC Voltage -
Climatic Category (IEC)	-
Ageing Characteristic	<2% per decade (nominal capacitance is 1000 hour value)

Knowles Precision Devices - Sales

Europe: KPD-Europe-sales@knowles.com

Asia: KPD-Asia-sales@knowles.com

USA: KPD-NA-sales@knowles.com

www.knowlescapacitors.com

This datasheet is for a standard item and is confirmed valid on the date generated, the latest published data for this part may differ and is available at http://www.knowlescapacitors.com or by contacting us.

© The information contained on this drawing is confidential and may not be copied in whole or part in any form or disclosed to a third party without the consent of Knowles and any customer mentioned within this specification.

Data is correct to the best of our knowledge, errors and omissions excepted.

Date: Friday, January 12, 2024

20240112 160525797UTC

High Reliability Multilayer Ceramic Chip Capacitor

Part Number: 1812B154K201CHT-HS

Description: 1812 200Vdc 150nF ±10% X7R (2R1) - Contains Lead

Environmental

RoHS Compliant to 2011/65/EC as amended by 2015/863/EU	Non Compliant
REACH Compliant	Contains 1 to 8% w/w Lead Titanium Oxide (PbTiO3, CAS 12060-00-3)
California Proposition 65	No exposure risk

Board Layout

Knowles' conventional 2-terminal chip capacitors can generally be mounted using pad designs in accordance with international specification IPC-7351, Generic Requirements for Surface Mount Design and Land Pattern Standards, but there are some other factors that have been shown to reduce mechanical stress, such as reducing the pad width to less than the chip width. In addition, the position of the chip on the board should be considered.

Some high voltage parts may require modifications to the board layout and/or the addition of a conformal coating to prevent flashover. Refer to application note AN0043 for further information.

IPC-7351 pad design

	1812	
C	4.00mm	0.157"
Y	1.55mm	0.061"
X	3.40mm	0.134"

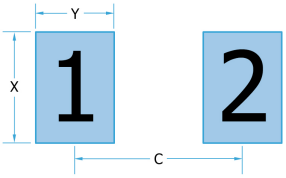

Packaging

Tape packaging information for tape-and-reel parts:

Tape and reel packing of surface mounting chip capacitors for automatic placement are in accordance with IEC60286-3.

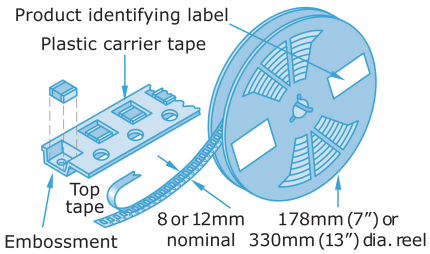

Soldering

Reflow solder in accordance with IPC-A-610. Recommended reflow profile as laid down in IPC/JEDEC J-STD-020.

Wave soldering is also possible, but care must be taken for case sizes 1210 and larger and component thickness >1.0mm. Trials are encouraged.

Hand soldering is not recommended and can lead to component damage through thermal shock.

PdAg terminations are primarily intended for conductive epoxy attachment - they may be suitable for soldering but trials are recommended.

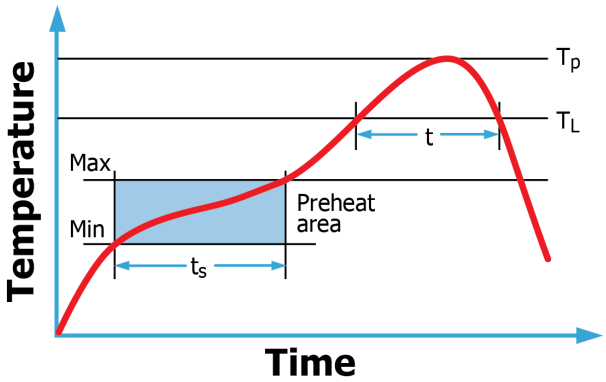

Application notes with mounting and handling guidance are available on request.

Compex DLI Johanson MFG Novacap Syfer Voltronics

Knowles Precision Devices - Sales

Europe: KPD-Europe-sales@knowles.com

Asia: KPD-Asia-sales@knowles.com

USA: KPD-NA-sales@knowles.com

www.knowlescapacitors.com

This datasheet is for a standard item and is confirmed valid on the date generated, the latest published data for this part may differ and is available at http://www.knowlescapacitors.com or by contacting us.

© The information contained on this drawing is confidential and may not be copied in whole or part in any form or disclosed to a third party without the consent of Knowles and any customer mentioned within this specification.

Data is correct to the best of our knowledge, errors and omissions excepted.

Date: Friday, January 12, 2024

20240112 160525797UTC